Preconcentration/Preelution Ion Chromatography for Perchlorate Analysis in Complex Matrices

Rashila Patel, Kang Tian, and Todd Anderson

The Institute of Environmental and Human Health
Texas Tech University

Factors Leading to the Development of the Pre-Concentration Method

- Greater affinity of the perchlorate ion for the pre-concentration column
- The relative ease of utilizing the same instrument
- The lower cost of installment
- Automation was achievable within a very short time frame
- The need to detect Perchlorate reliably at a much lower level at a relatively lower cost
-

Schematic of the Pre-Concentration Method

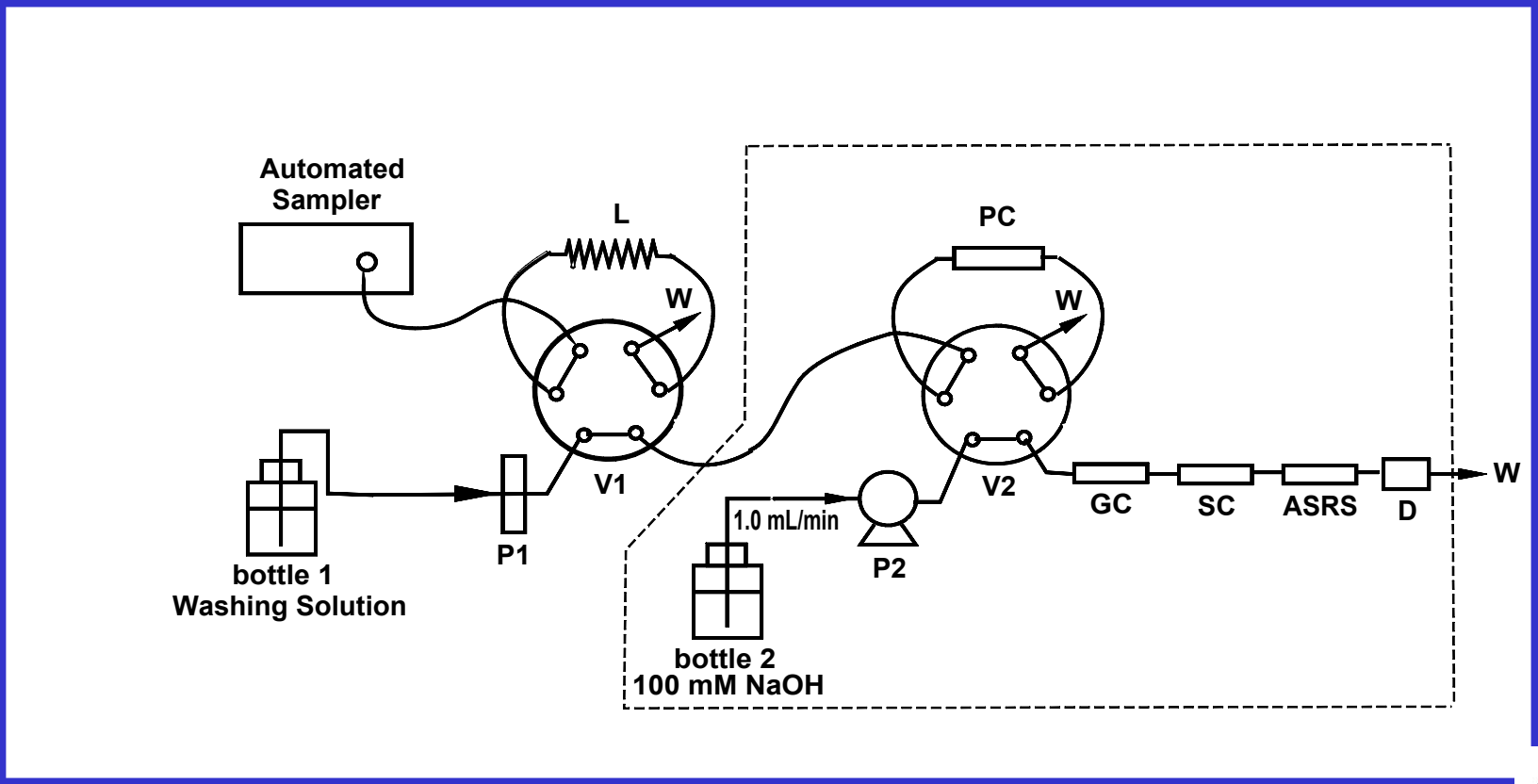

A Brief Summary of the Method

- Auto sampler fills the sample loop L in V1
- V1 then switches to INJECT position after 2.0-2.8 min (varied depending on loop volume) so the loop contents are transferred to PC by wash solution pumped by P1, the sample transferred to PC is washed
- V2 is switched to INJECT position for 65-150 sec so sample is injected into the separation system
- After perchlorate is separated from the other anions in analytical column, the corresponding suppressed signal is detected by the conductivity detector, D. P1 is kept running during the entire period.

Facts to Consider for Optimal Analyses

- Wash concentration
- Wash time frame
- Wash volume
- Duration of the injection
- Limit of detection
- Linearity of response
- Precision and accuracy
- Recoveries using present method vs 314.0

Pre-Washing Strategy

- Matrix ions are generally less strongly retained than perchlorate and can thus be preferentially eluted before the preconcentrated sample is injected.
- However, an excessively high concentration of the wash solution can interfere with the uptake of the analyte and, if premature elution of perchlorate itself is to be avoided, the total optimal prewash volume may be so short for a high concentration wash that accurate control will be difficult.
- On the other hand, a minimum prewash volume is necessary to transfer the loop contents to PC.
- Additionally, too dilute a wash solution will result in inefficient washing of the column (permitting a greater than desirable amount of the matrix to be injected to the separation system) or too great a wash time will be needed.
- For maximum sample throughput rate, the sum of the sample load and the prewash period should not be greater than the chromatographic analysis time.

Pre-washing Concentration and Volume

8.0 μg/L was loaded on the column.

- For 10 mM NaOH as the preeluent, 2.2-7.4 mL wash volume was applied.
- For the 15 mM NaOH as the pre-eluent, 2.0-5.8 mL wash volume was applied.

We noted that :

- At very low wash volumes, loop contents are not completely transferred to PC.
- At high wash volumes, it will be lost from PC.
- The maximum permissible wash volume will decrease as the salinity of the sample and loaded amount increases.
- For the sample matrix range of interest, 10 mM or 15 mM NaOH was found adequate as the pre-eluent.

Wash Solution Concentration and Prewash Volume/Period

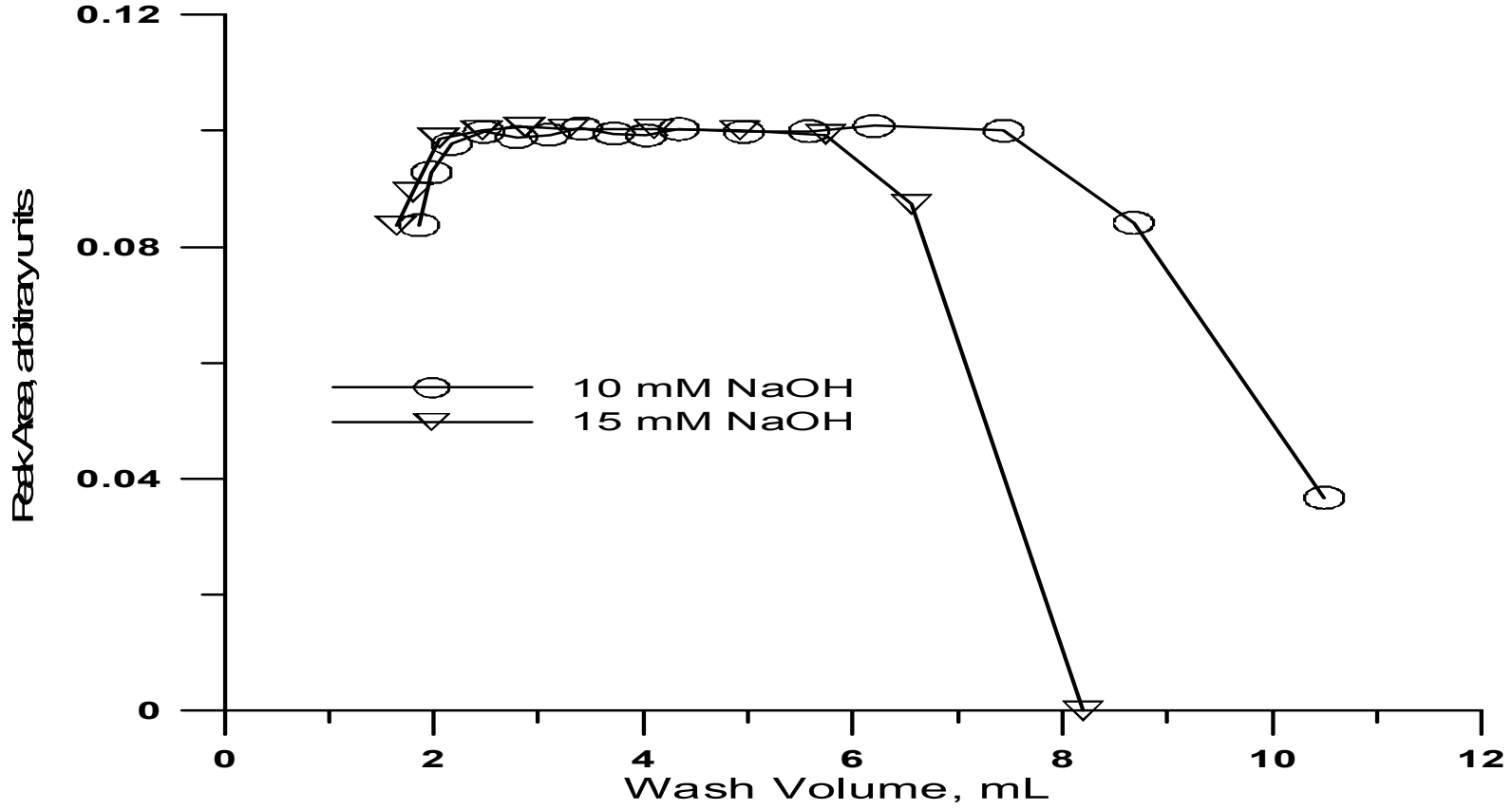

Effects of Wash Volumes

- Within the permissible wash volume range, using more wash solution will lead to a lower background but will increase the analysis time for each sample.
- We analyzed one sample using three different parameters.

Pantex groundwater sample spiked with 20 μg/L of perchlorate and analyzed as follows:

(a) standard chromatographic conditions with large loop injection akin to EPA method 314.0

(b) present method with 2.0 mL of 15 mM NaOH pre-eluent

(c) present method with 4.1 mL of 15 mM NaOH pre-eluent.

Optimizing Wash Volume

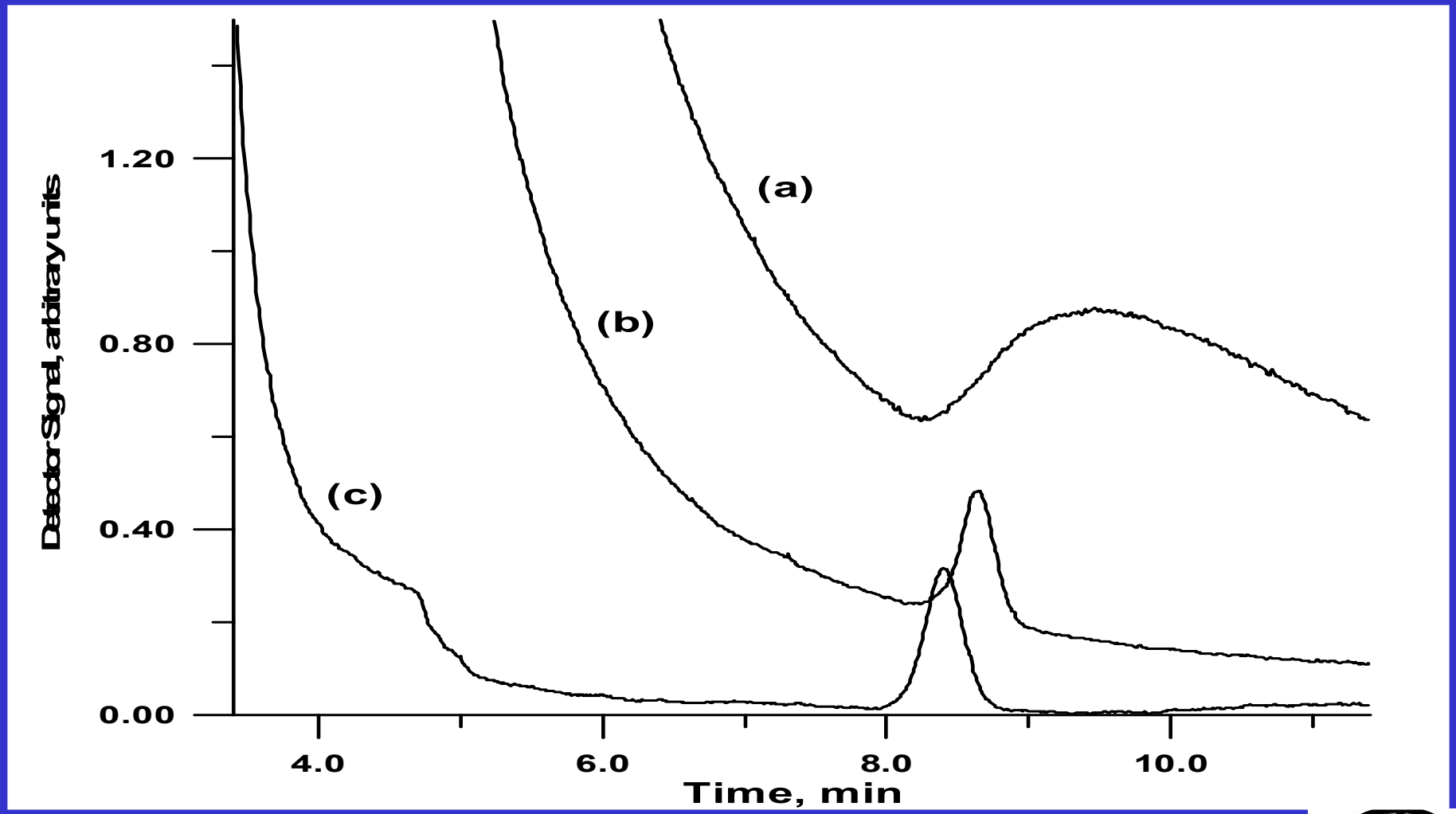

Injection Duration

- Sample injection valve V2 must remain in INJECT position long enough to inject the perchlorate from the PC fully.
- At least 60 seconds are needed to make the sample transfer.
- Even lower concentrations showed the same perchlorate response time.
- Optimal time frame has steadily been from 60-180 seconds.

Injection Duration vs Analyte Concentration

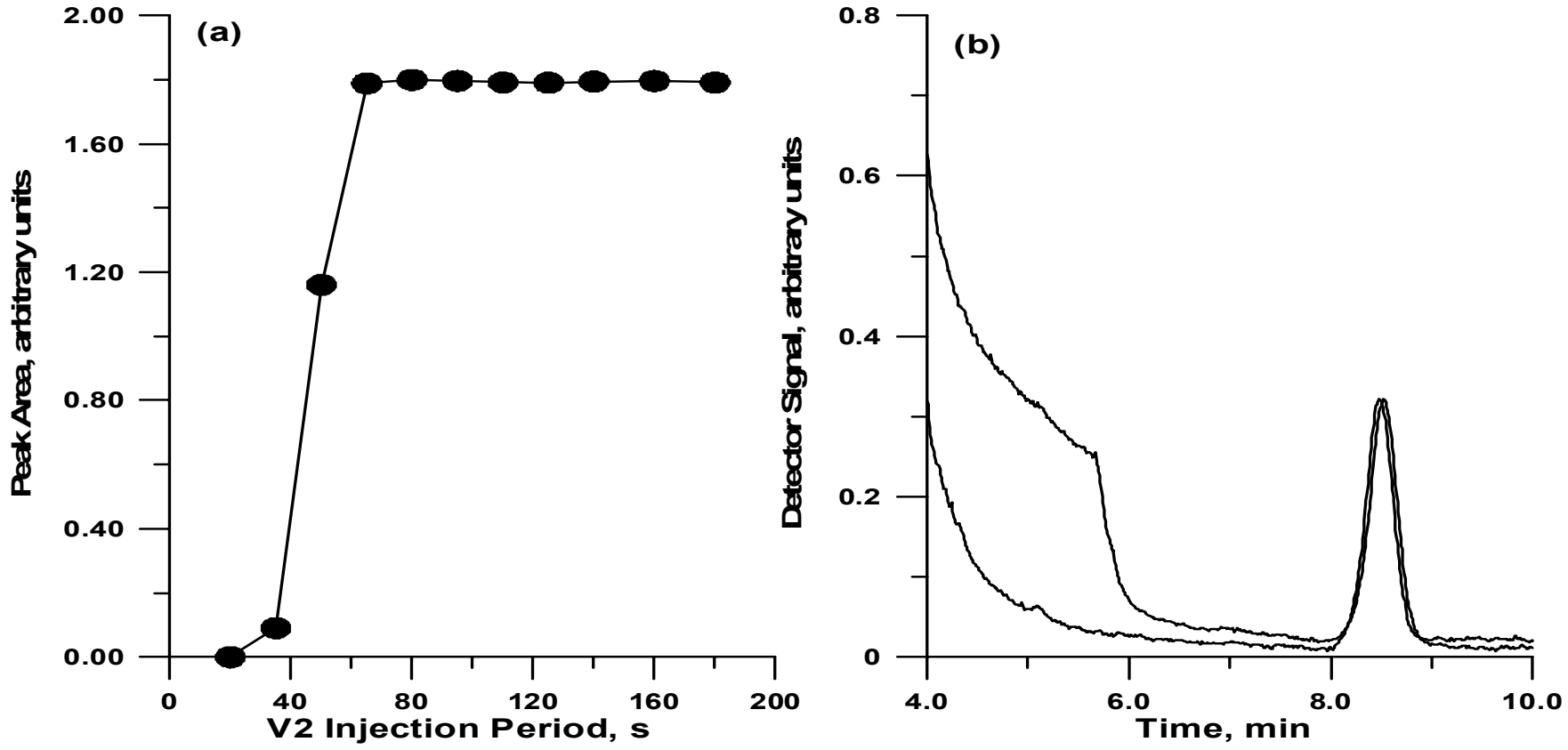

Limit of Detection

- For low salinity samples, the use of the preconcentration column allows one to lower the LOD by increasing the volume of the sample injected.
- For an 8.0 μg/L perchlorate sample in reagent water, the response (peak area) was linear from 0.5 to 20 mL injected sample volume with an observed r2 value of 0.9985.

Linearity of Response

- For 2.0 mL injections of 1.0, 4.0, 8.0, 25, 50, 100, 150, 200, 250, 300, 350, 400 μg/L perchlorate in reagent water (V2 injection duration 90 s, 4.6 mL 15 mM NaOH preeluent) the response could be described by the equation:

$$A = (0.00583 \pm 0.00003)[ClO_4^-, \mu g/L] - (0.0172 \pm 0.0067), r^2=0.9997$$

Precision and Recovery

- A Pantex groundwater sample was spiked with 4.0, 50, and 100 μg/L perchlorate and quantitated by triplicate injection (2.0 mL volume) on the basis of a calibration curve made from standards in reagent water. The data indicated recoveries in the range of 98% to 104% and a precision of 0.9-3.7%.

Data for Experiments on Accuracy and Precision

Amount of ClO_4^- Added µg/L	Amount of ClO_4^- Detected µg/L	Recovery (%) ± SD
4.00	3.92 ± 0.147	98.1 ± 3.68
50.0	51.3 ± 0.418	103 ± 0.917
100	104.4 ± 0.112	104 ± 1.12

Performance in High Salinity Matrices

- Two high salinity samples, each containing 25 μg/L perchlorate were prepared in:
  - (a) TCEQ-supplied groundwater matrix (κ = 4.7 mS/cm)
  - (b) EPA Method 314 test matrix containing 2000 mg/L each of SO_4^{2-}, Cl^-, and CO_3^{2-} (κ = 14.7 mS/cm)

Performance in High Background Matrices

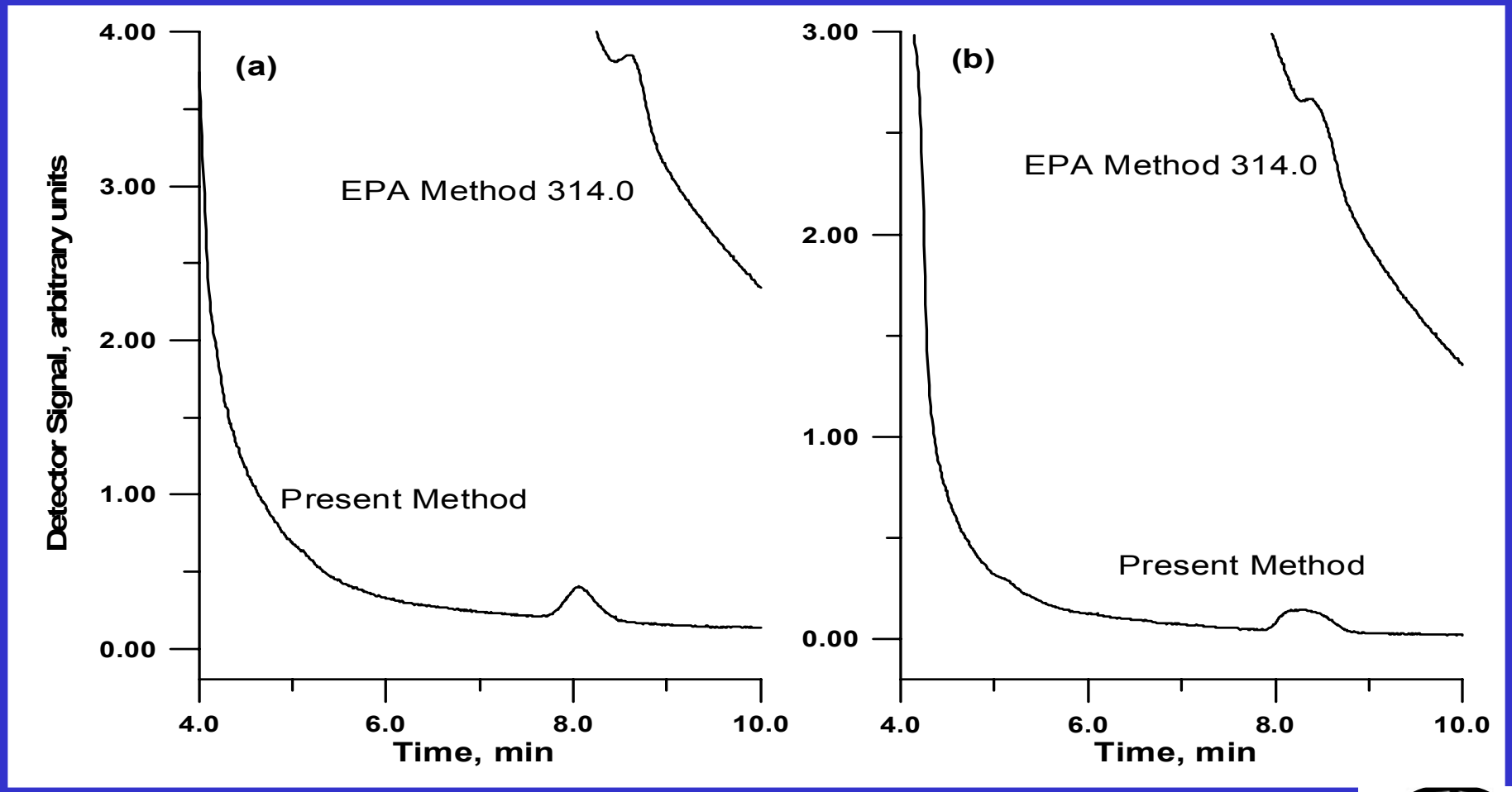

Recovery from High Salinity Samples

- A series of solutions containing different levels of SO_4^{2-}, Cl^-, and CO_3^{2-} were made using the process described in EPA Method 314.0.
- Samples were analyzed using the present method and Method 314.0.
- Perchlorate recoveries were determined.
- It is worthwhile to note that 92% recovery was possible even at the highest conductivity. The relative standard deviations ranged from 0.2 to 1.1%, generally worsening with increasing matrix salinity for both methods.
- Four months later, with the system being routinely used for this type of analysis, the recoveries were measured again.
- The recovery was still acceptable (95%) for the presently proposed method with an 8 mS/cm matrix.

Recoveries of Present Method vs. Method 314.0

Sample Matrix	Percent Recovery		Percent Recovery After 4 month Column Use	
Conductance µS/cm	Present Method	EPA 314.0	Present Method	EPA 314.0
<1	100*	100*	100*	100*
1767	98.8	99.4		
3425	99.6	97.3	97.5	93.7
4850	99.0	96.5		
8063	98.8	94.0	95.3	83.5
9451	99.7	93.7		
10850	99.4	92.0	89.0	77.9
12650	96.4	88.9	83.9	73.4
14680	92.0	84.2	77.0	66.5

*Reference Basis

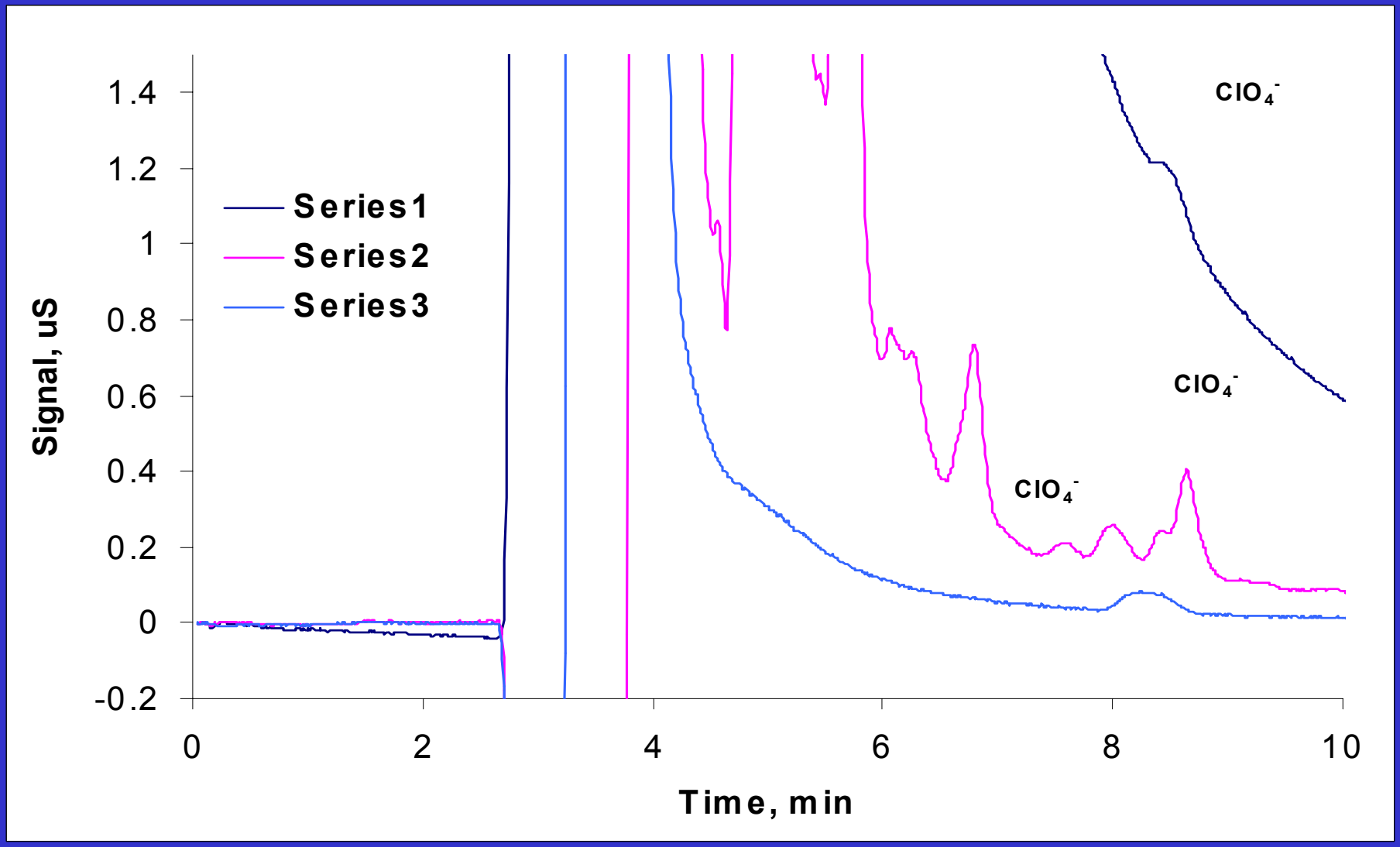
Signal, uS
1.4
1.2
1
0.8
0.6
0.4
0.2
0
-0.2
0
2
4
6
8
10
Time, min
Series1
Series2
Series3
ClO_4^-
ClO_4^-
ClO_4^-

Summary

We have developed a simple yet robust automated procedure for the determination of low levels of perchlorate in high salinity samples; the method is also equally applicable to drinking water samples.

Acknowledgments

Dr. Sandy Dasgupta, Texas Tech

Dr. Andrew Jackson, Texas Tech

Brian Condike, USACE

Dionex

TCEQ

Brazos River Authority